Frankenstein house: Stone house for the Morrow's family

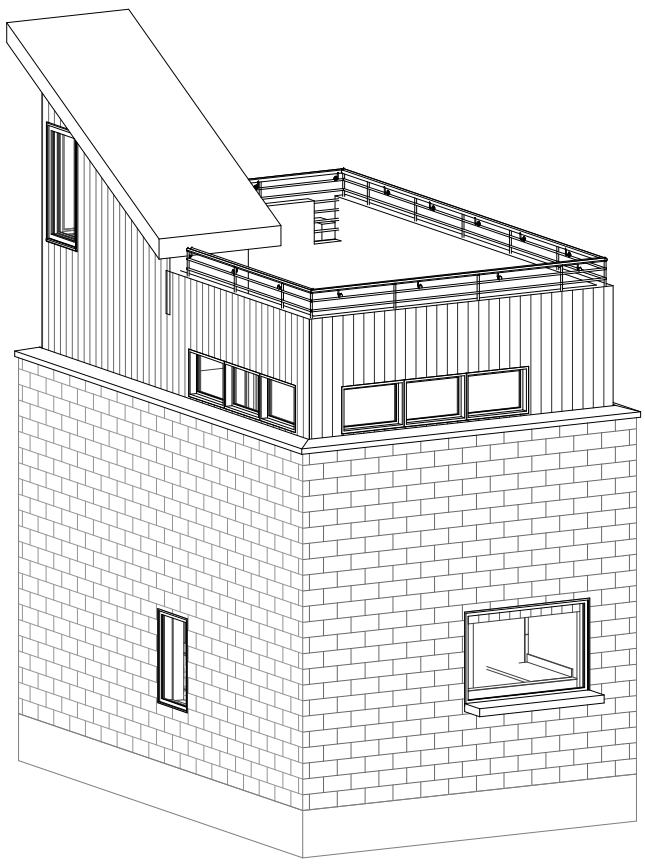

1
A000
EAST VIEW

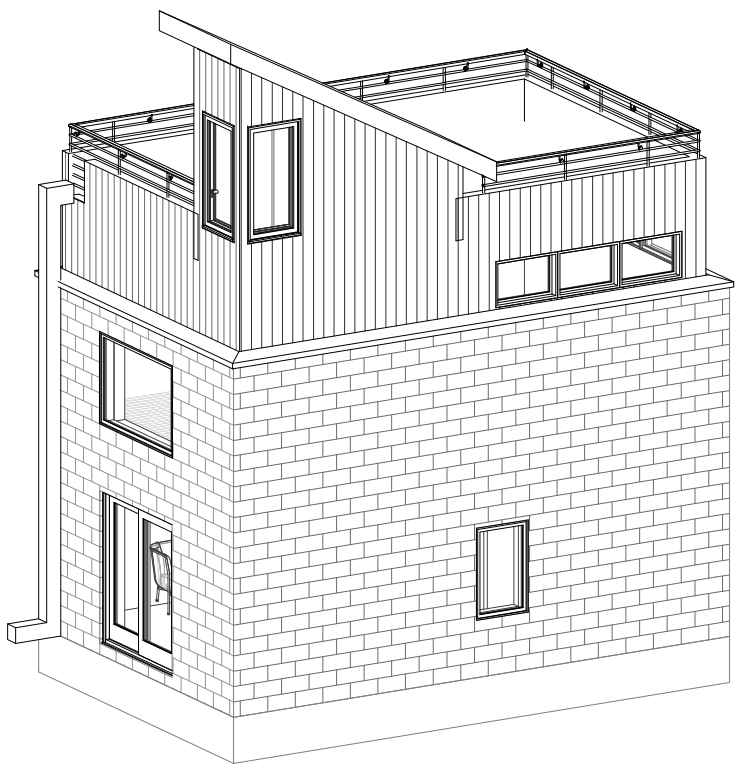

2
A000
SOUTH VIEW

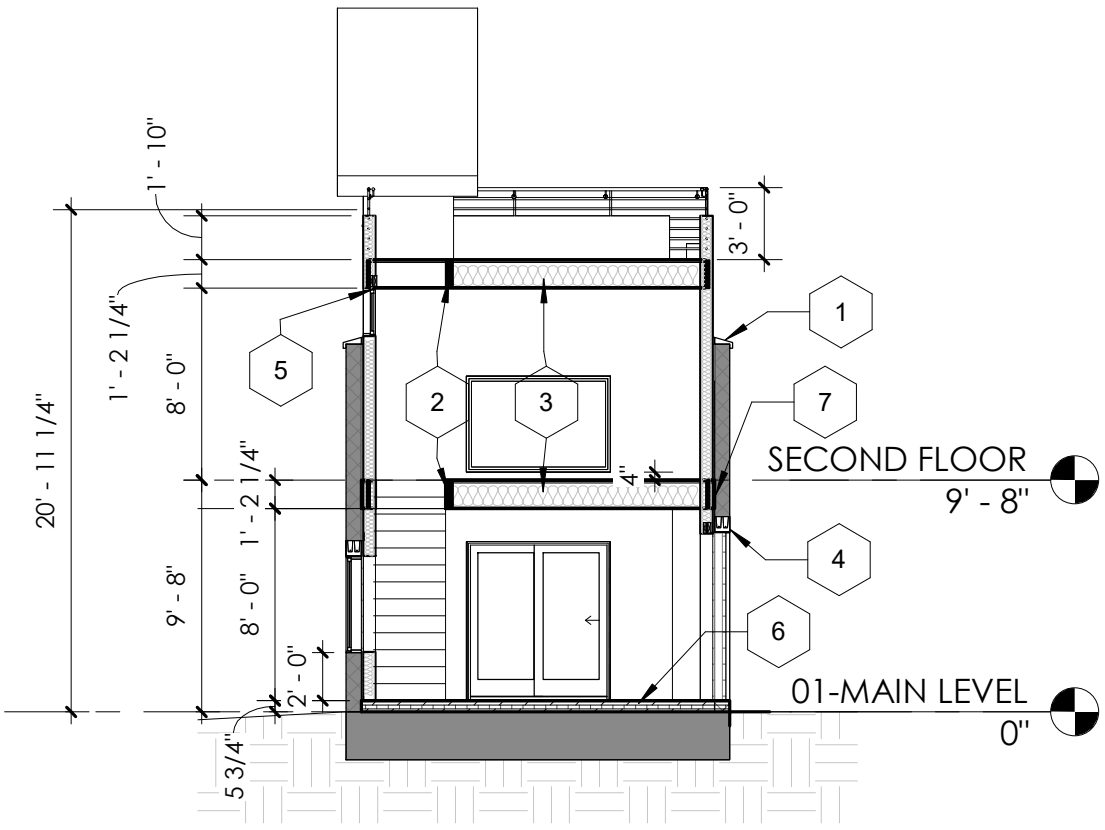

1 / A101 **N-S SECTION**

1/8" = 1'-0"

SECTION KEYNOTES

1. FLASHING
2. LVL BEAM SUPPORTING THE CUT OUT
3. TJI TRUSS + SHEATHING + FINISH FLOOR
4. BOND BEAM OR I BEAM; TYP AT ALL OPENINGS
5. HEADER @WINDOW AND DOOR; TYP
6. STEEPER+RIGID INSULATION+FURRING + FINISH FLOOR
7. RIM BEAM ALL PERIMETER OF TRUSS; TYP
8. WATER HEATER LOCATION; TBD
9. OUTLETS
10. STEP FROM T.O. SLAB
11. SWITCHES
12. DRAIN PIPE ENSLOSED IN METAL SCUPPER

GENERAL NOTE:

1. NO STUD SHOULD TOUCH THE CMU WALL
2. A GAP OF 1" SHOULD BE PROVIDED BETWEEN ANY NEW CONSTRUCTION
3. AT INTERVALS: STEEL PENETRATION OR ALUMNUM TO BE PROVIDED TO TIE THE STRUCTURE TO THE CMU
4. TO EASE THE CONSTRUCTION, A BOND BEAM CAN BE USED INSTEAD OF AN I BEAM FOR ALL NEW OPENING
5. ALL DOORS AND WINDOWS SHOULD HAVE A HEADER
6. BLOWN IN INSULATION CAN BE USED FOR ALL WALLS
7. WALLS EXTEND BEYOUND THE CMU WILL NEED SHEATHING ON BOTH SIDES
8. NO PLATFORM SHOULD BE CONSTRUCTED OUTSIDE THE DOOR OR SLIDING DOOR. THIS STRUCTURAL STOOP NEEDS TO BE DETAILED SEPERATELY

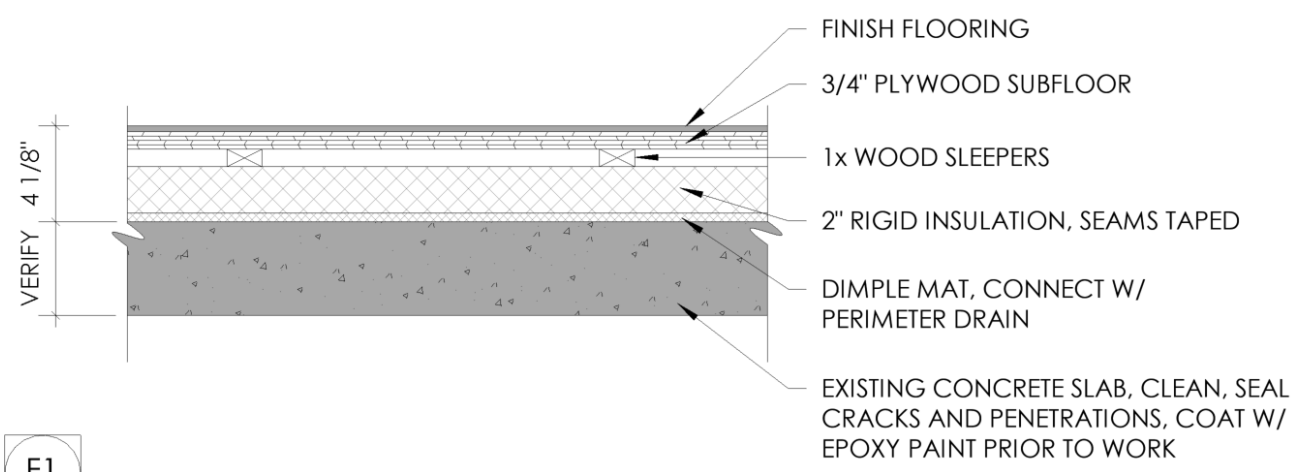

F1

INSULATION AT EXISTING SLAB-ON-GRADE FLOOR

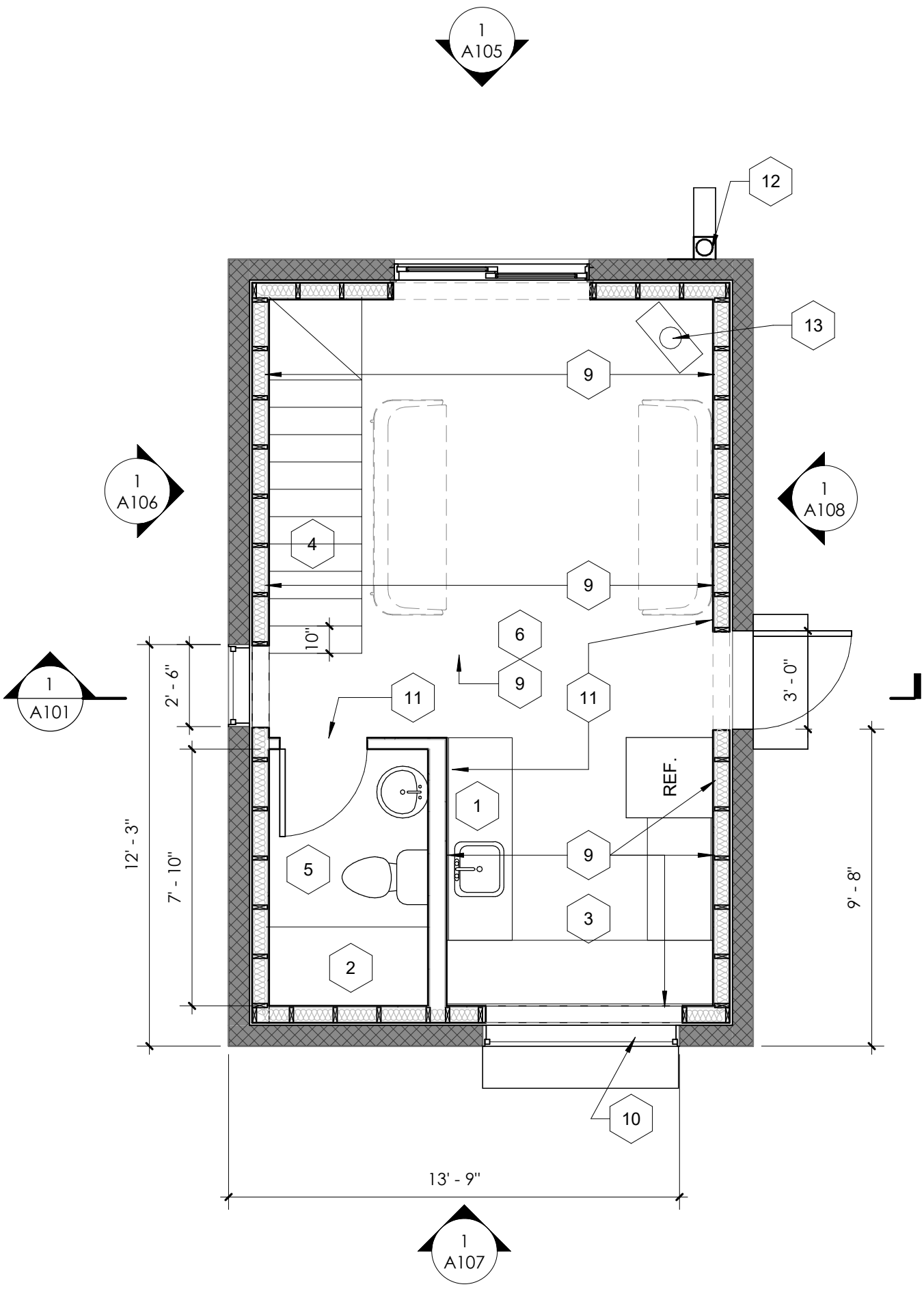

PLAN KEYNOTES

1 KITCHEN COUNTER

2 SHOWER

3 KITCHEN SINK

4 14 RISERS @ 10" TREAD

5 TILING

6 INSULATION ON SLAB AND FLOORING ON TOP

7 RELOCATE PIPING FOR TOILET BOWL; TBD

8 WATER HEATER LOCATION; TBD

9 EXTEND KITCHEN COUNTER

10 STEP FROM T.O. SLAB

11 SWITCHES

12 DRAIN PIPE ENSLOSED IN METAL SCUPPER

13 WOOD STOVE

1 A100 **01-MAIN LEVEL**

1/4" = 1'-0"

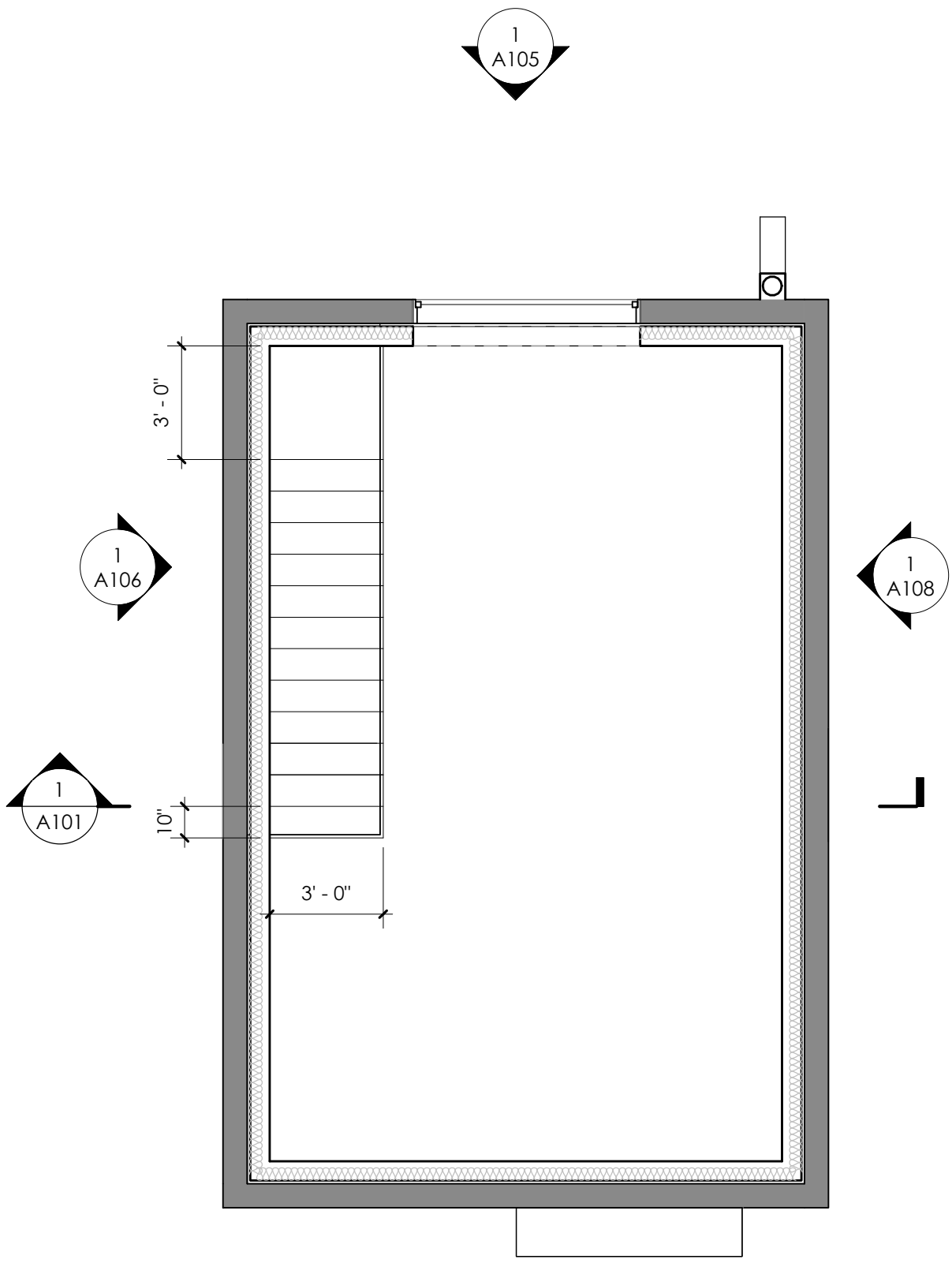

PLAN KEYNOTES

1 KITCHEN COUNTER

2 SHOWER

3 KITCHEN SINK

4 14 RISERS @ 10" TREAD

5 TILING

6 INSULATION ON SLAB AND FLOORING ON TOP

7 RELOCATE PIPING FOR TOILET

8 WATER HEATER LOCATION; TBD

9 EXTEND KITCHEN COUNTER

10 STEP FROM T.O. SLAB

11 SWITCHES

12 DRAIN PIPE ENSLOSED IN META

13 WOOD STOVE

1
A103

SECOND FLOOR- WK EO

1/4" = 1'-0"

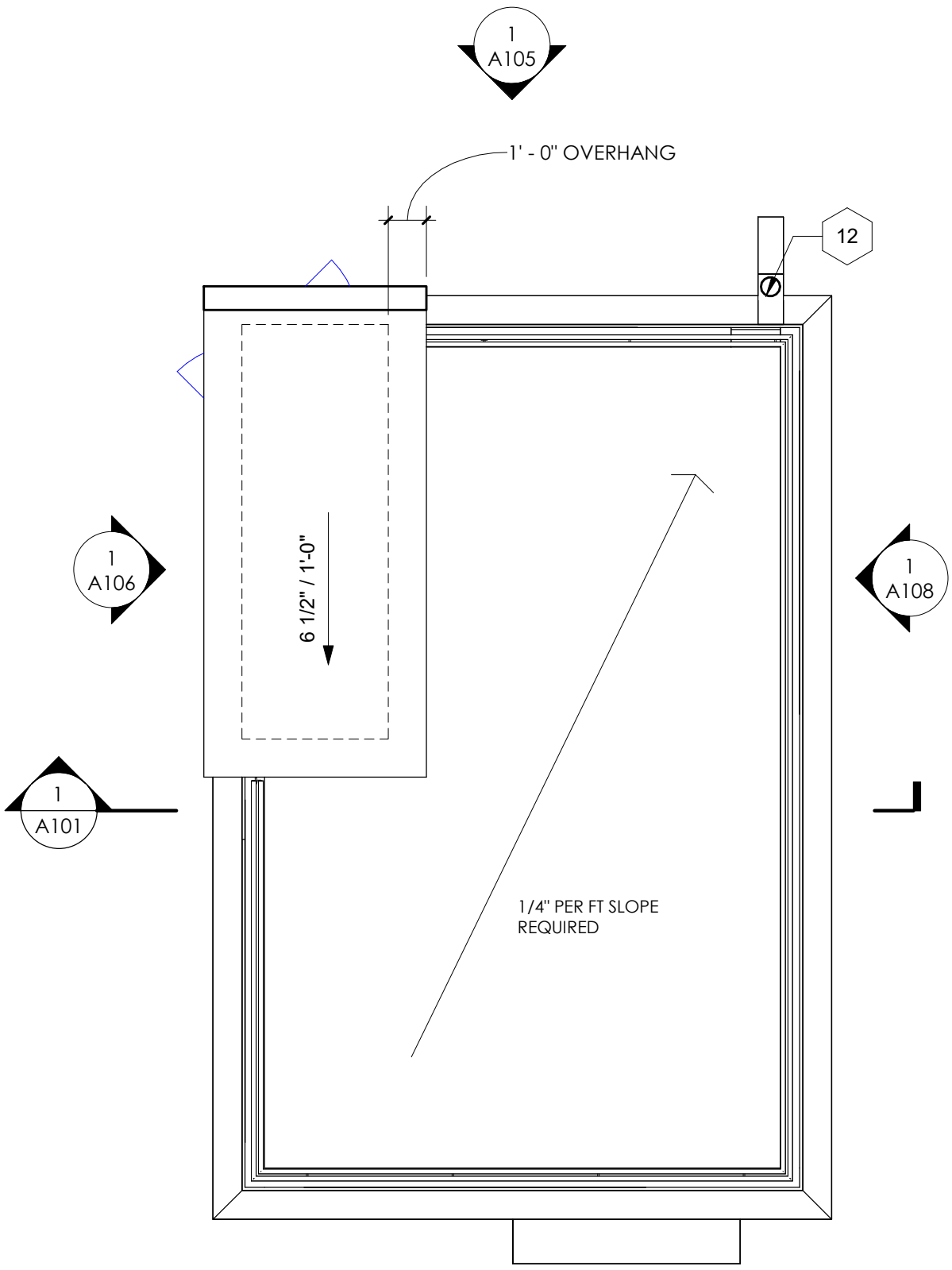

1
A104

03-B.O. ROOF

1/4" = 1'-0"

1
A107

PLAN KEYNOTES

1 KITCHEN COUNTER

2 SHOWER

3 KITCHEN SINK

4 14 RISERS @ 10" TREAD

5 TILING

6 INSULATION ON SLAB AND FLOORING ON TOP

7 RELOCATE PIPING FOR TOILET BOWL; TBD

8 WATER HEATER LOCATION; TBD

9 EXTEND KITCHEN COUNTER

10 STEP FROM T.O. SLAB

11 SWITCHES

12 DRAIN PIPE ENSLOSED IN METAL SCUPPER

13 WOOD STOVE

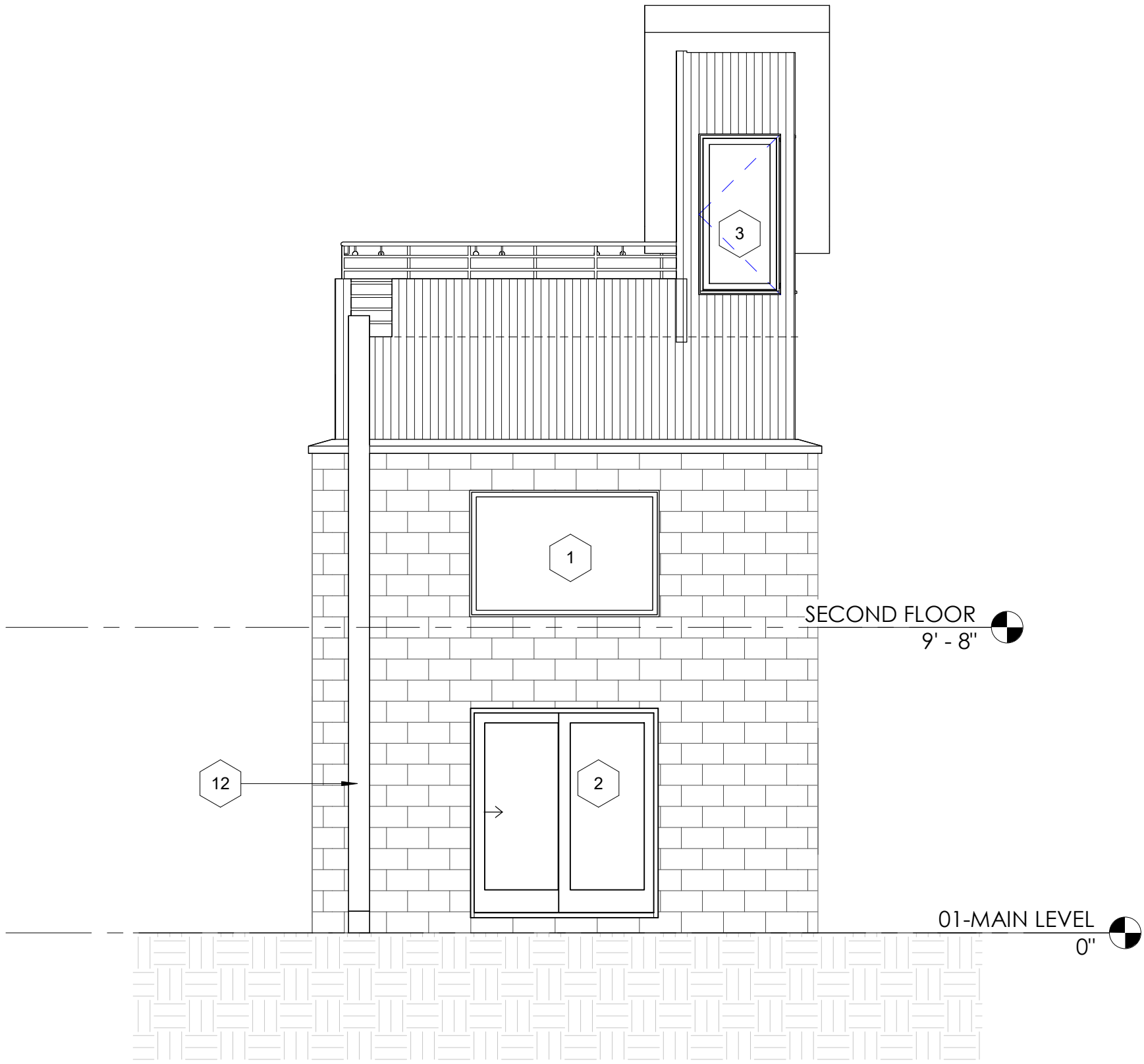

1 A105 **ELEVATION W**

1/4" = 1'-0"

ELEVATION KEYNOTES

1 WINDOW SIZE (6' X 4')

2 SLIDING DOOR (6' 7" X 5' 11")

3 WINDOW (2' 6" X 5')

4 WINDOW (2' X 3')

5 WINDOW (2' 6" X 4')

6 WINDOW SIZE (6' X 4'). SPECIAL WINDOW THAT OPEN VERTICALLY

7 DOOR (3' X 6' 8"')

GENERAL NOTE:

1. CUT THE SIZE OF THE MASONRY HOLE FIRST BEFORE WE PURCHASED WINDOW
2. SLOPE GRADE AWAY FROM THE BUILDING AT ALL PERIMETER OF THE BUILDING. 1/4" PER FT IS RECOMMENDED

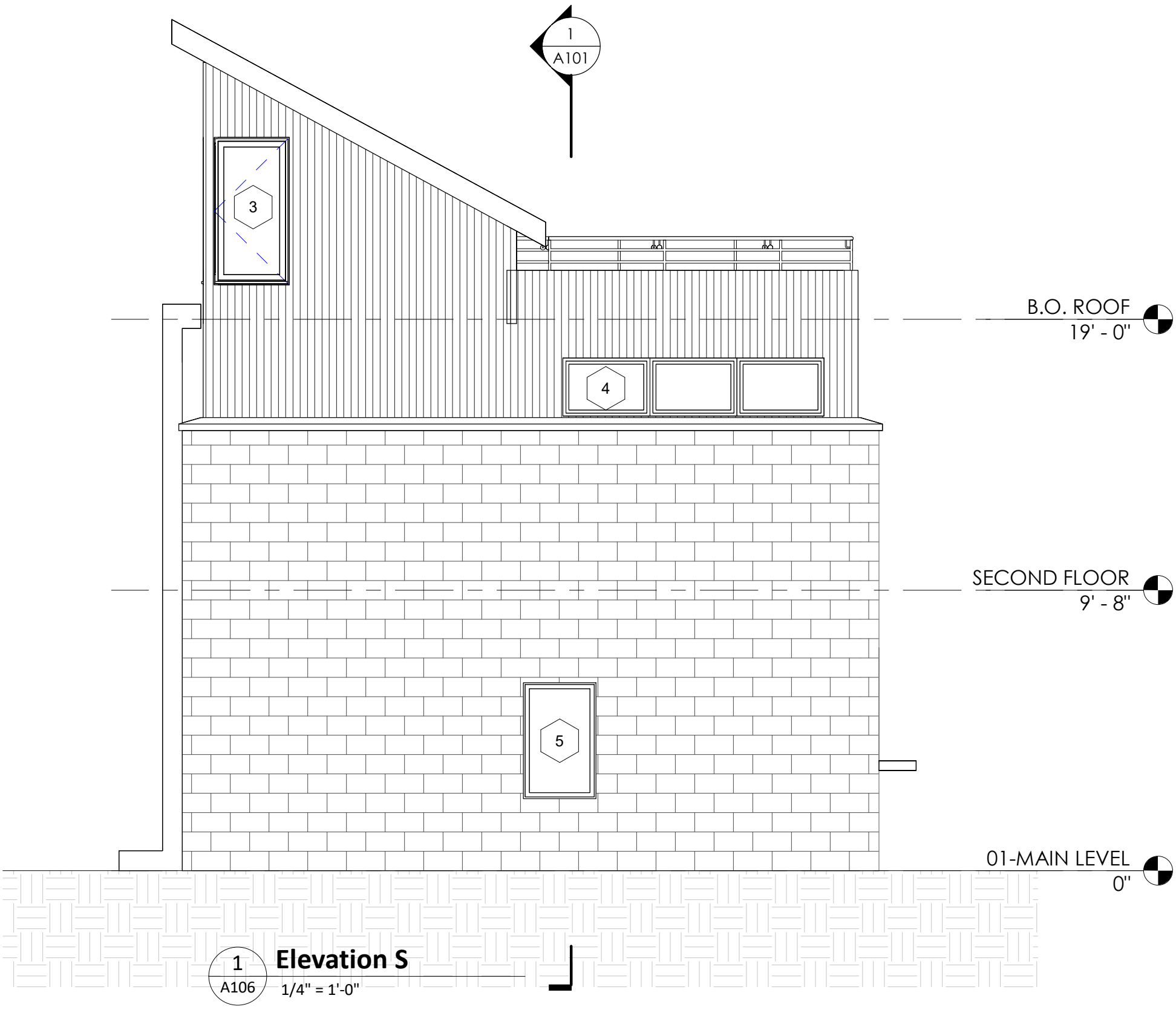

ELEVATION KEYNOTES

1 WINDOW SIZE (6' X 4')

2 SLIDING DOOR (6' 7" X 5' 11")

3 WINDOW (2' 6" X 5')

4 WINDOW (2' X 3')

5 WINDOW (2' 6" X 4')

6 WINDOW SIZE (6' X 4'). SPECIAL WINDOW THAT OPEN VERTICALLY

7 DOOR (3' X 6' 8"')

GENERAL NOTE:

1. CUT THE SIZE OF THE MASONRY HOLE FIRST BEFORE WE PURCHASED WINDOW
2. SLOPE GRADE AWAY FROM THE BUILDING AT ALL PERIMETER OF THE BUILDING. 1/4" PER FT IS RECOMMENDED

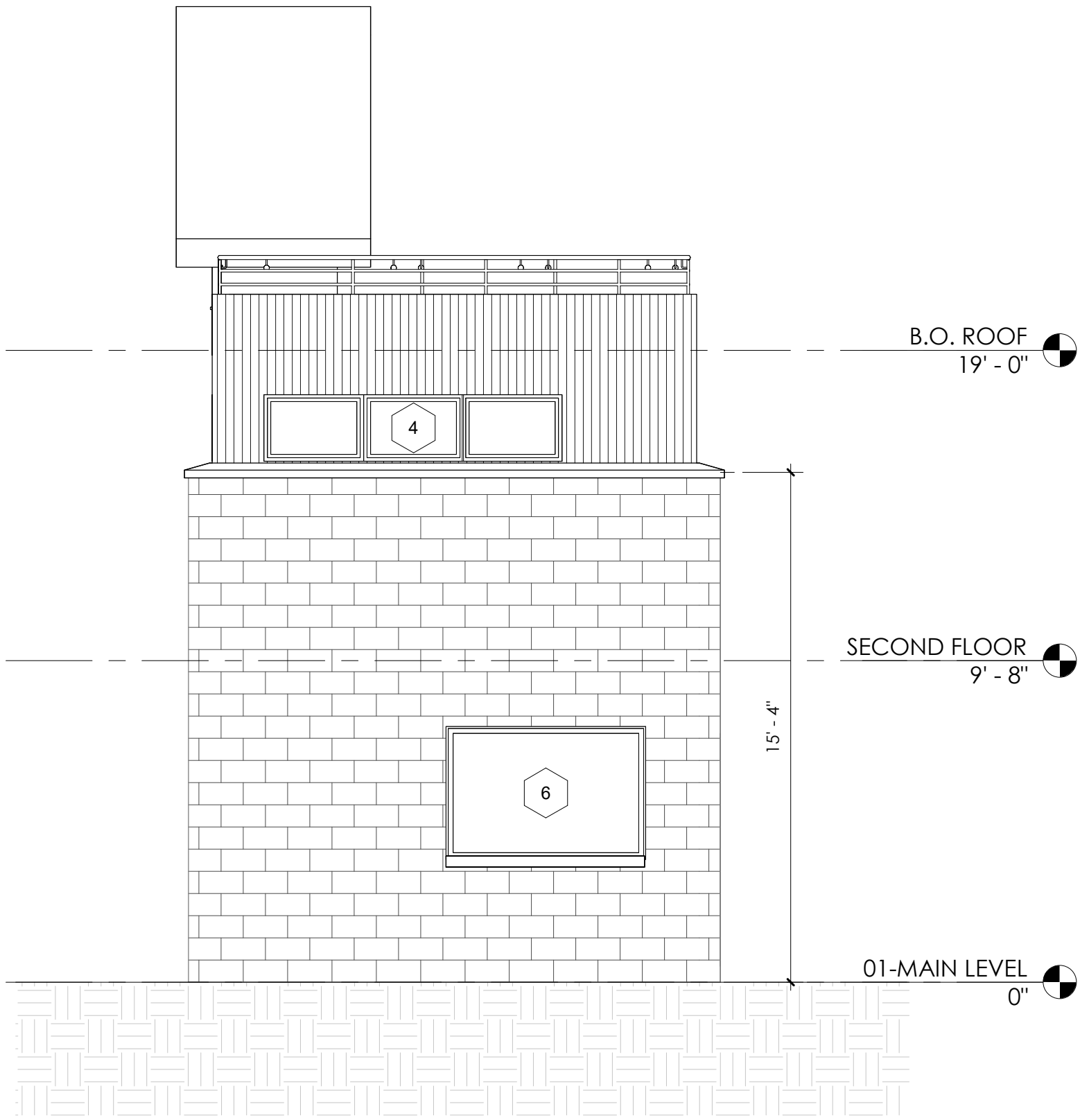

1
A107

ELEVATION E

1/4" = 1'-0"

ELEVATION KEYNOTES

1 WINDOW SIZE (6' X 4')

2 SLIDING DOOR (6' 7" X 5' 11")

3 WINDOW (2' 6" X 5')

4 WINDOW (2' X 3')

5 WINDOW (2' 6" X 4')

6 WINDOW SIZE (6' X 4'). SPECIAL WINDOW THAT OPEN VERTICALLY

7 DOOR (3' X 6' 8"')

GENERAL NOTE:

1. CUT THE SIZE OF THE MASONRY HOLE FIRST BEFORE WE PURCHASED WINDOW
2. SLOPE GRADE AWAY FROM THE BUILDING AT ALL PERIMETER OF THE BUILDING. 1/4" PER FT IS RECOMMENDED

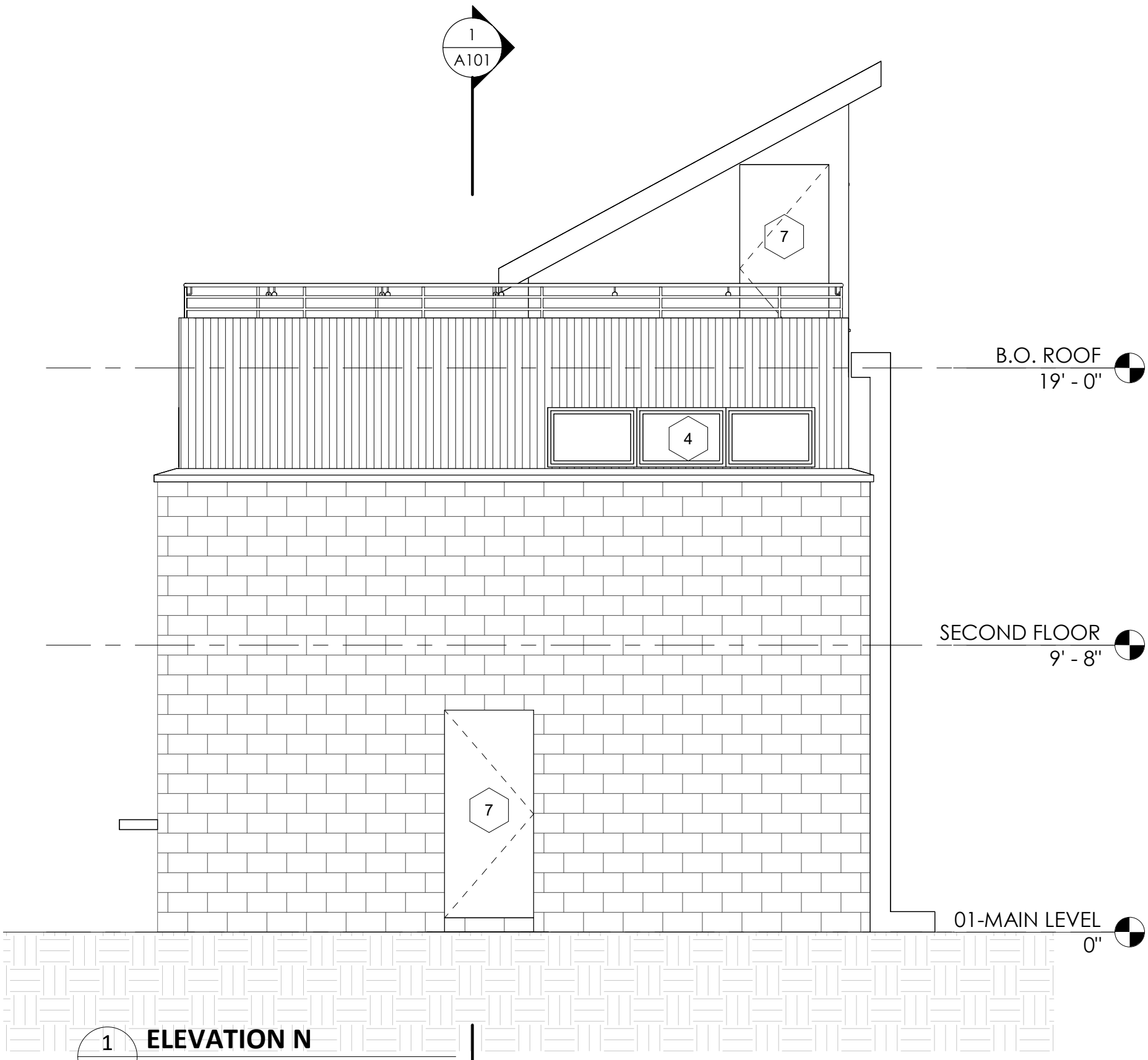

1 A108 **ELEVATION N**

1/4" = 1'-0"

ELEVATION KEYNOTES

1 WINDOW SIZE (6' X 4')

2 SLIDING DOOR (6' 7" X 5' 11")

3 WINDOW (2' 6" X 5')

4 WINDOW (2' X 3')

5 WINDOW (2' 6" X 4')

6 WINDOW SIZE (6' X 4'). SPECIAL WINDOW THAT OPEN VERTICALLY

7 DOOR (3' X 6' 8"')

GENERAL NOTE:

1. CUT THE SIZE OF THE MASONRY HOLE FIRST BEFORE WE PURCHASED WINDOW
2. SLOPE GRADE AWAY FROM THE BUILDING AT ALL PERIMETER OF THE BUILDING. 1/4" PER FT IS RECOMMENDED